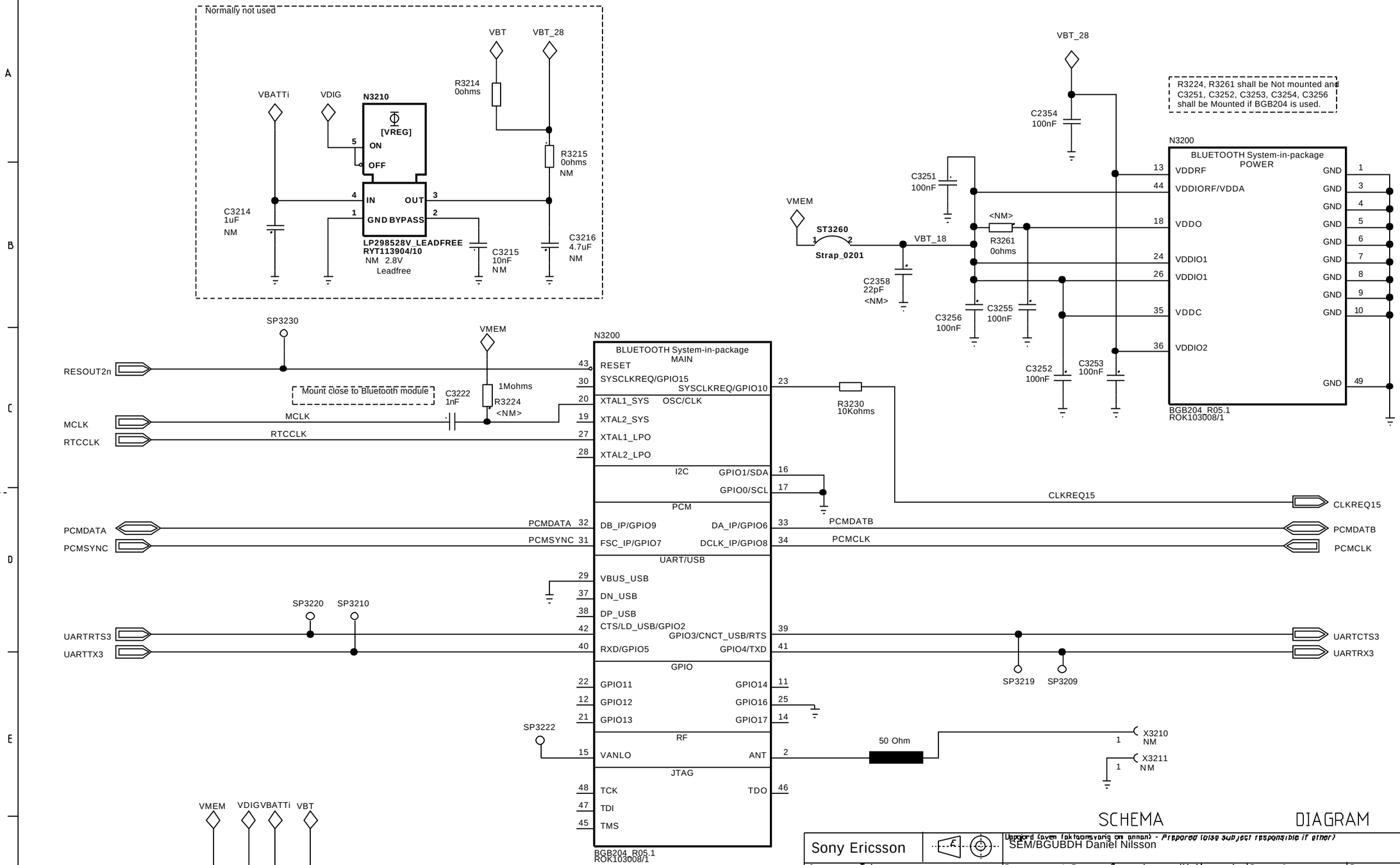

LZF 030 103/F RB

PDF processed with CutePDF evaluation edition www.CutePDF.com